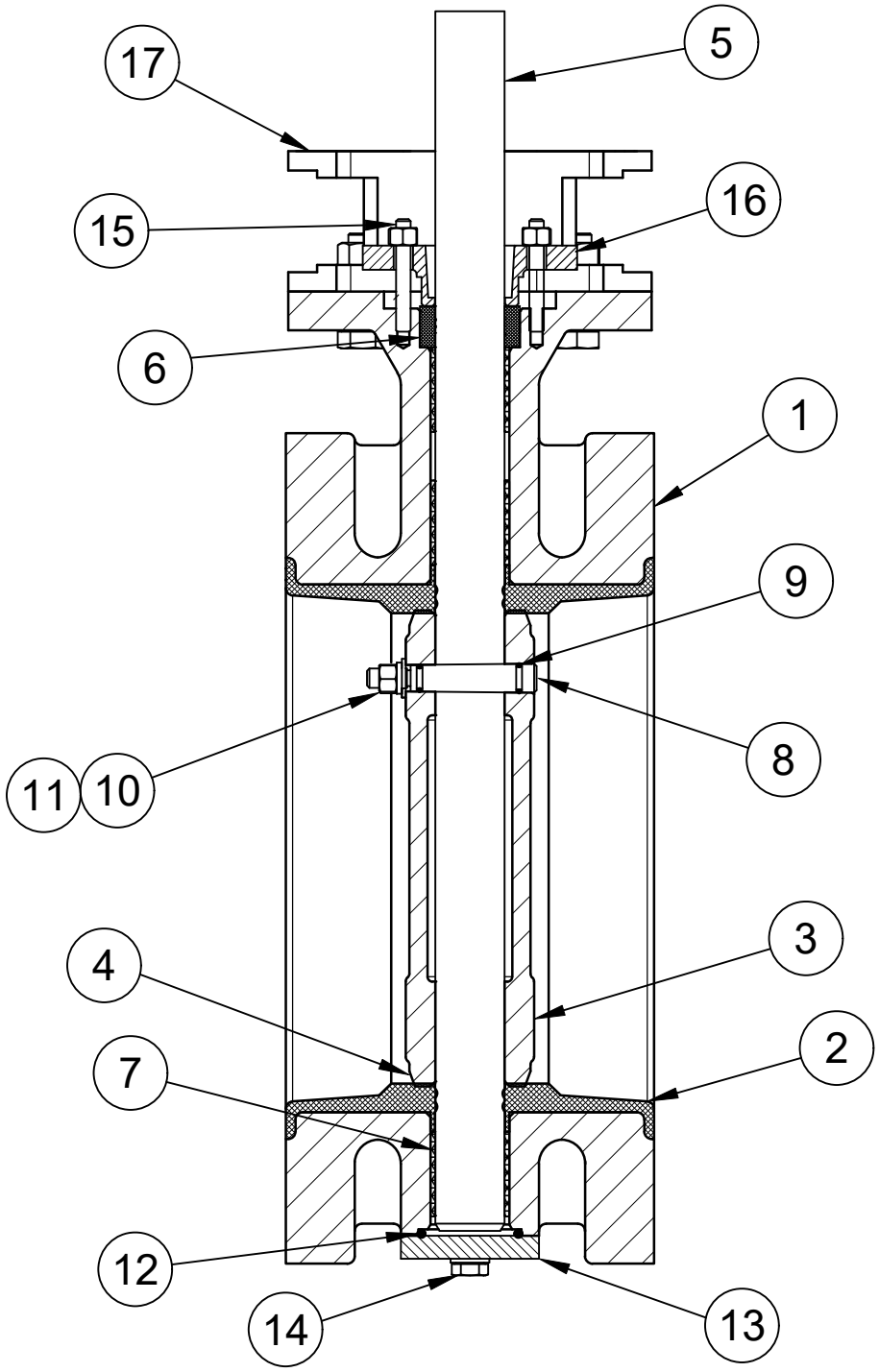

No.	PART	MATERIAL
1	Body	Ductile Iron, ASTM A536 - GR 65-45-12
2	Body Seat	EPDM
3	Disc*	Ductile Iron, ASTM A536 - GR 65-45-12
4	Disc Edge	Stainless Steel, T316
5	Stem	150B - Stainless Steel, T316
		250B - Stainless Steel, T630
6	V-Packing	EPDM
7	Bearing	Teflon-Lined; Fiberglass Backed
8	Taper Pin	Stainless Steel, T630
9	Taper Pin O-Ring	EPDM
10	Hex Nut	Stainless Steel, T316
11	Washer	Stainless Steel, T316
12	O-Ring (3"-8")	EPDM
	V-Packing (10"-24")	
13	End Cap	Carbon Steel, #45
14	Hex Bolt	Stainless Steel, T316
15	Packing Retainer Stud	Stainless Steel, T316
16	Gland	Ductile Iron, ASTM A536 - GR 65-45-12
17	Stand	Ductile Iron, ASTM A536 - GR 65-45-12

*Stainless Steel, T316 for 3" Valve Size

DESCRIPTION:	DATE:	DRAWING:
3"-24" AWWA Butterfly Valve Materials of Construction (Seat on Body) - Above Ground	07/01/24	BF-MC0001-A

MPI MCWANE PLANT & INDUSTRIAL

McWane Plant & Industrial
1201 Vanderbilt Road
Birmingham, AL 35234